ROBINSON WILLEY

The hottest name in heating

SAHARA with Safeguard and SAHARA DE LUXE with Safeguard

RADIANT/CONVECTOR GAS FIRE

Sahara (Pewter)	G.C. No. 32 689 38
Sahara (Antique Bronze)	G.C. No. 32 689 39
Sahara De Luxe (Pewter)	G.C. No. 32 689 40
Sahara De Luxe (Antique Bronze)	G.C. No. 32 689 41

INSTALLATION AND SERVICING INSTRUCTIONS

IMPORTANT - This fire is for use on Natural Gas ONLY (G20)

Cat. I_{2H} (G20) at 20mbar in GB and IE.

Gas Safety (Installation and Use) Regulations .

It is the law that all gas appliances are installed by competent persons (e.g. Corgi member) in accordance with these installation instructions, all the relevant parts of the local and national Building Regulations, current IEE Wiring Regulations and all relevant recommendations of the following British Standard Codes of Practice:

1. BS 5871 : Part 1
2. BS 5440 : Part 1 : (Flues)
3. BS 5440 : Part 2 : (Air Supply)
4. BS 715
5. BS 6891
6. BS 1289 : 1975
7. BS 1289 : Part 1 : 1986 and part 2 : 1989
8. The Building Regulations issued by the Department of Environment and the Building Standards (Scotland) (Consolidation) Regulations issued by the Scottish Development Department.
9. Any other relevant British Standard Code of Practice and/or Local Building Regulations, and in accordance with 'the rules in force'.

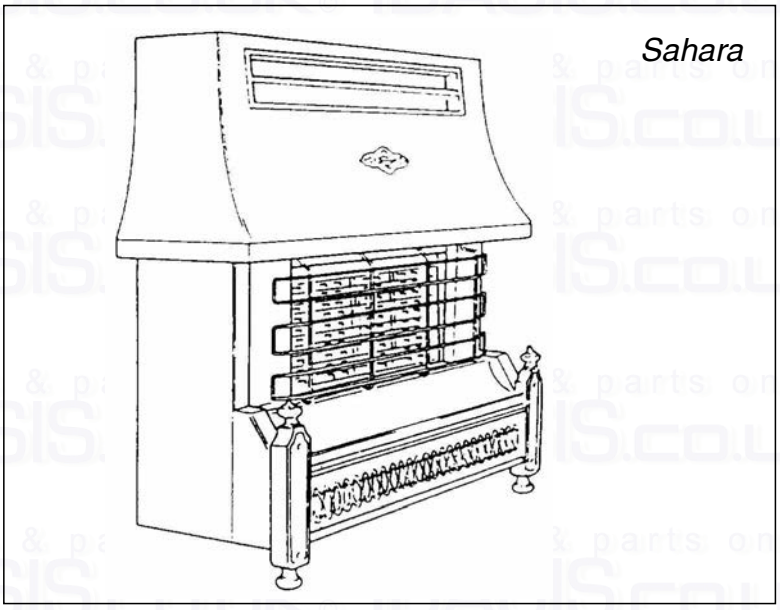

Sahara

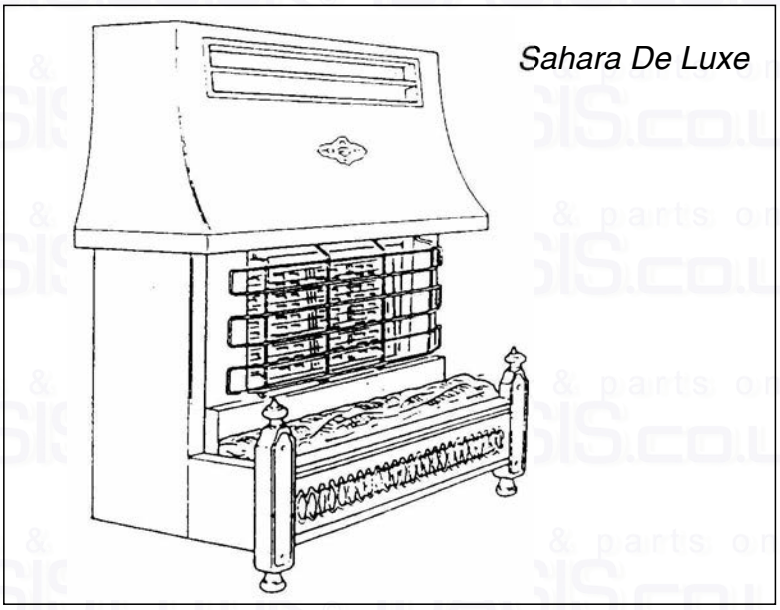

Sahara De Luxe

This appliance must be installed in accordance with the rules in force

LEAVE THESE INSTRUCTIONS WITH THE USER

spares & parts online
IBASIS.co.uk©

Introduction

The SAHARA with Safeguard is a radiant convector gas fire, the De Luxe version has a simulated log fuel effect. It is suitable for conventional brick chimney, pre-cast flues, various proprietary flues and metal flue box conforming to BS 715. The fire can be either hearth mounted or wall mounted on a non-combustible hearth or wall. The control system consists of a duplex burner and a duplex gas tap with flame supervision device. Ignition is by an integral piezo spark operated by turning the gas tap knob. There is an oxygen depletion sensing pilot fitted to the fire.

The fire is suitable for use with lightweight surrounds whose continuous working temperature is not less than 100°C.

IMPORTANT: "SOFT FURNISHINGS"

When considering fitting any heating appliance or wallpapering a room in which one is fitted, if 'soft furnishings" or other heat sensitive materials are used in the vicinity of the heat source, they may become heat damaged or discoloured.

spares & parts online IBASIS.CO.UK

Specifications

1.0 Technical Data

1.1 OVERALL DIMENSIONS (mm)

	SAHARA De Luxe	SAHARA
Height	640	640
Width	727	727
Depth	285	232
Height to top of flue spigot	412	412
Weight (Kg)	25.5	24

1.2 HEAT INPUT (GROSS)

Maximum Input	6.04kW	20,600 Btu/h
Minimum Input	1.55kW	5,290 Btu/h
Maximum Output	4.78kW	16,320 Btu/h
Setting Pressure Cold	17.0 mbar ± 1 6.8in w.g. ± 0.4	
Supply Pressure	20 mbar (8in w.g.)	

1.3 BURNER - Aerated Duplex Burner

Aeration Adjustment	- None
Injector 2 off	- RW 220
Ignition	- Piezo Igniter Integral with gas tap
Control Tap	- Concentric tap with f.s.d. Model No. TE/SA/2353
Pilot Burner	- OP NG9031 OR NG9077
Inlet Connection	- Rp ¼ (¼ BSP)
1.4 SETTINGS	- OFF, PILOT ⁄,1, 2. 3, 4.

Fig. 1A

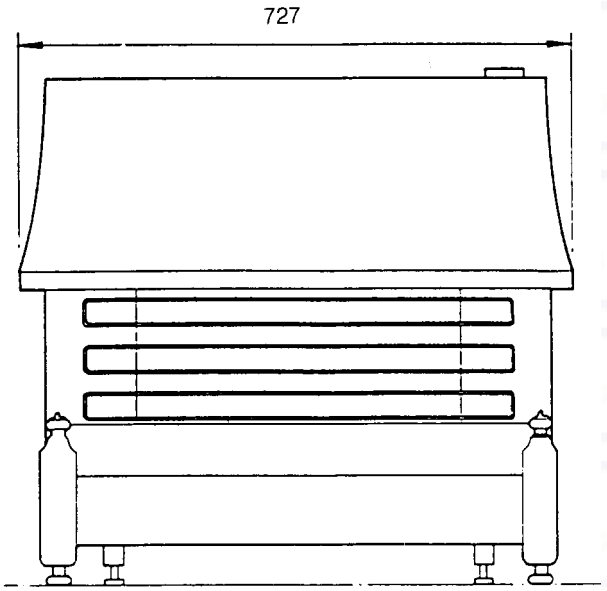

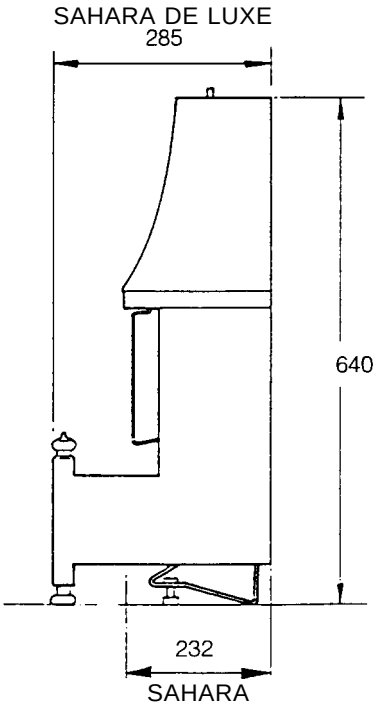

Fig. 1B

2.0 Site Requirements

2.1 THE FIREPLACE AND SURROUND

The fireplace must be of non-combustible material having an opening size to the dimensions shown in Fig. 3A for Hearth Mounting and Fig. 3B for Wall Mounting respectively. It is IMPORTANT that there is no combustible material or cladding in the vertical flat area shown in dotted lines in Figs. 3A and 3B. The fire should be installed so that no part of the combustible side wall is less than 508mm (20in) from the radiant source. If this is not possible, the combustible side wall must be suitably protected.

Some curvature of the surround is permissible but should this mean that there would be a gap between the back of the fire and the surround exceeding 13mm (½in) then a flue spigot extension (not supplied) must be used. The maximum projection of the spigot extension measured from the back of the fire is 150mm (6in). A 150mm extended spigot RW Part No. 991134 is available. It may need shortening to suit the installation.

A wooden shelf may be fitted above the fire. The underside of any combustible shelf of 150mm (6in) depth must be at least 115mm (4½in) above the top of the fire. For shelves of greater depth allow an increase of 13mm (½in) in shelf height for every 25mm (1in) increase in shelf depth. (Refer to shelf height in Users Instructions). A clearance of 50mm (2in) measured from the case side is required at each side for access / servicing.

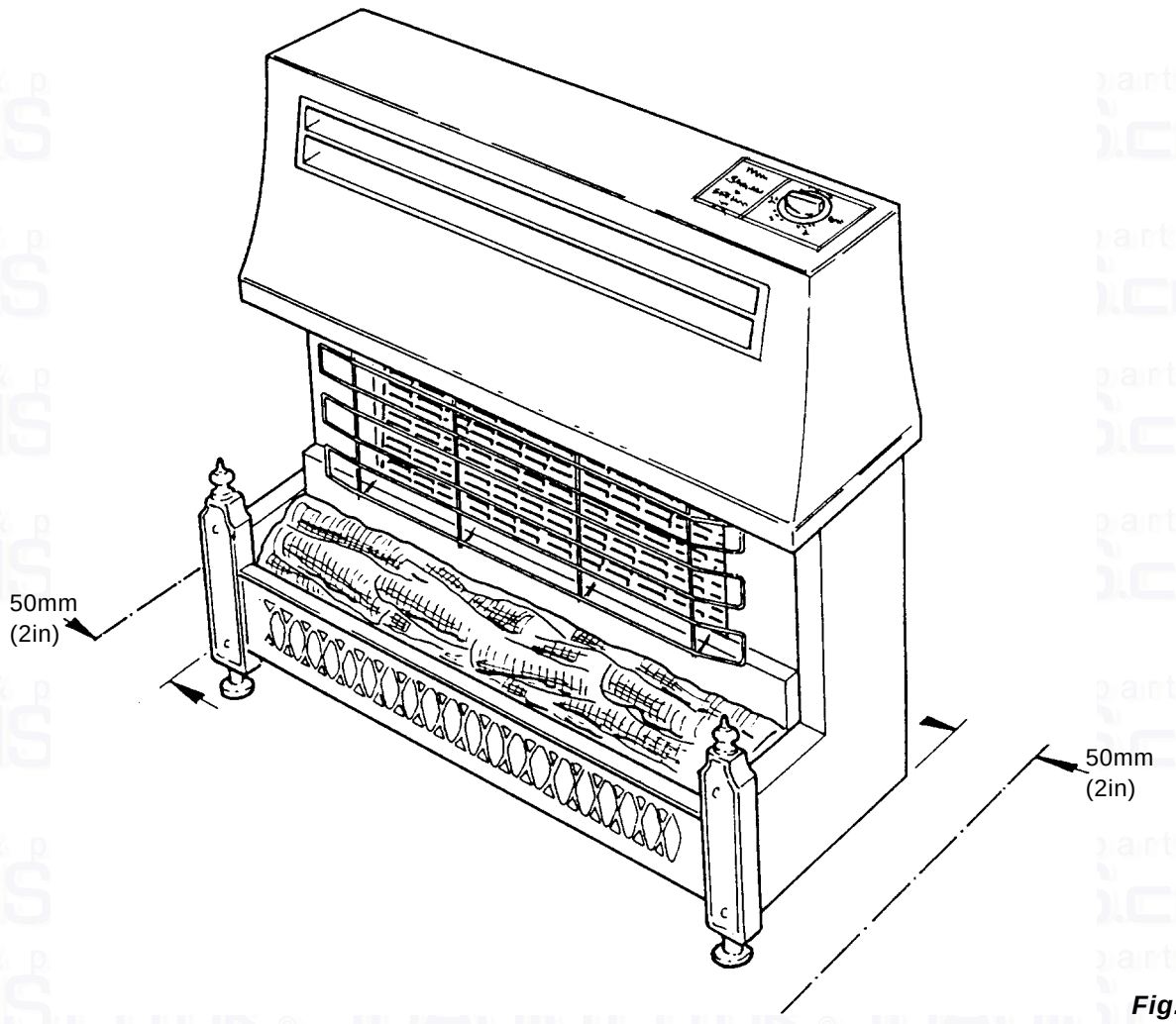

Fig. 2

Site Requirements

a) Hearth Mounting (Fig. 3A)

The hearth must be non-combustible material at least 13mm (½in) thick and measuring at least 710 mm (28in) wide by 305mm (12in) deep with the fireplace opening central. Its top surface should preferably be 50mm (2in) above the floor level to discourage placing of rugs or carpets over it.

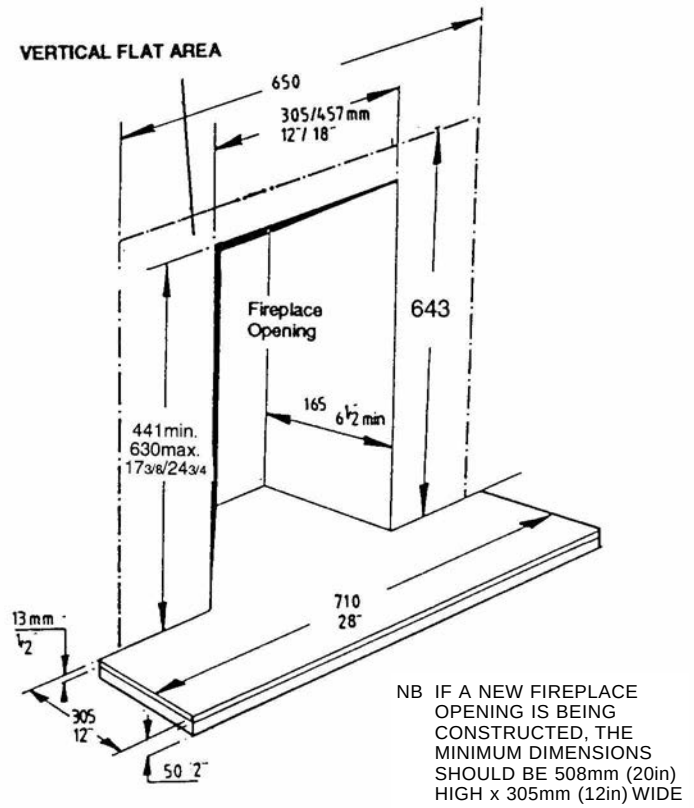

Fig. 3A

b) Wall Mounting (Fig. 3B)

The fire may be fitted onto a suitable non-combustible wall so that the top of the spigot opening in the closure plate is at least 488mm above the finished floor level.

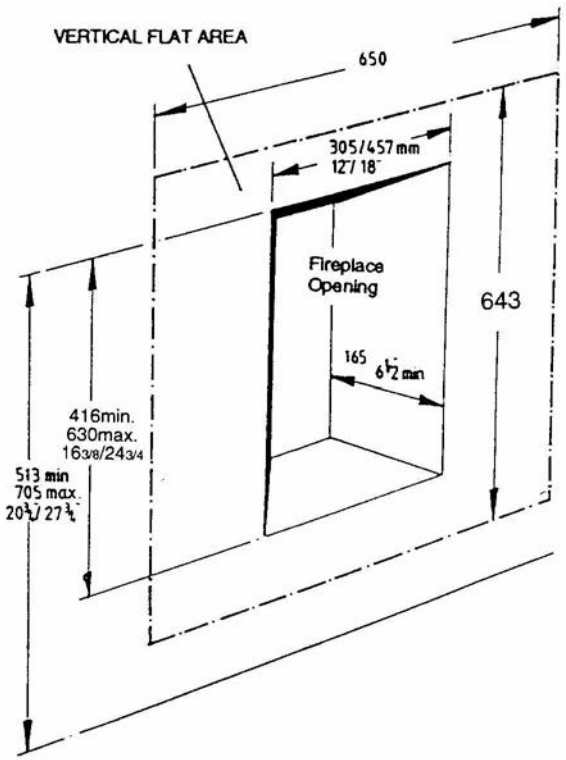

Fig. 3B

2.2 BRICK CHIMNEY

228mm x 228mm (9in x 9in)

A chimney previously used to burn solid fuel must be swept prior to installation.

The chimney must be inspected to ensure that:-

(a) It serves only one fireplace

(b) It is properly sealed so that combustion products do not escape from the flueways into the room.

(c) It is not blocked by paper, rubble etc.

(d) Any restriction such as a damper, register plate etc. must be removed or secured in the fully open position

(e) Any underdraught ventilation or additional air supply entering the fireplace or on the hearth must be sealed off.

(f) The cross-section area of the flue must not be less that 120cm² (19in²)

(g) It must have a positive updraught.

(h) It must have at least a 3 metre effective flue height.

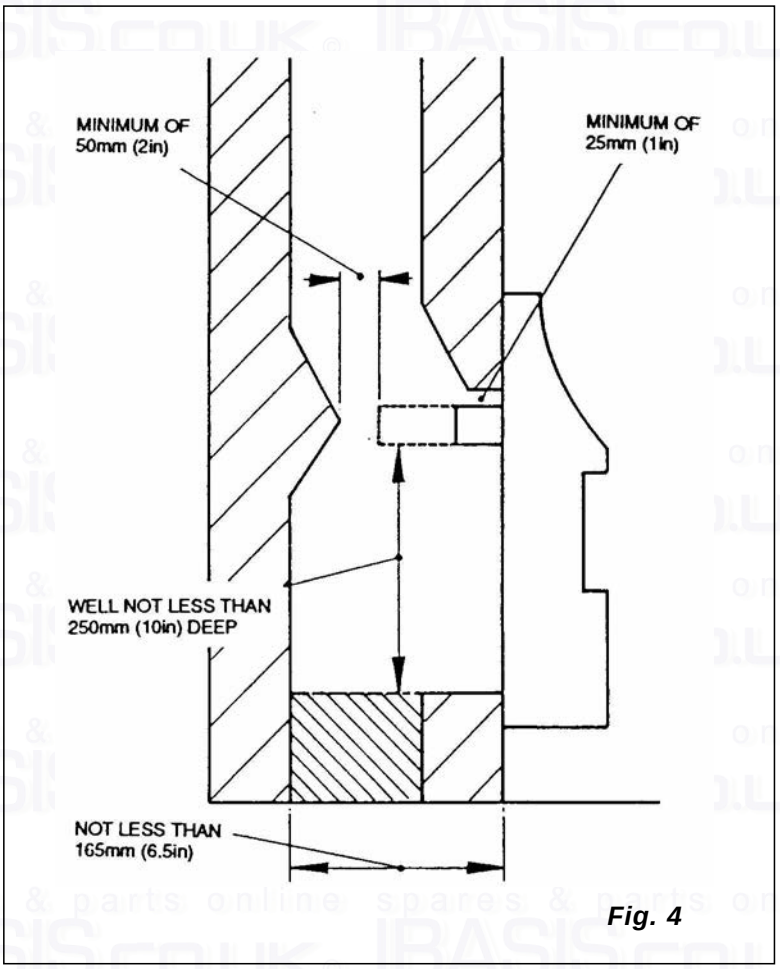

Fig. 4

2.2.1. Fireplace Dimensions (Fig. 4)

The dimensions of the catchment space behind the closure plate must meet the following requirements:

(a) The flue spigot/spigot extension must pass through the closure plate by at least 25mm (1in) and have a minimum clearance of 50mm (2in) between its open end and the nearest obstruction.

(b) The catchment space below the flue spigot must be at least 250mm (10in) deep measured from the bottom of the flue spigot to the top of the catchrnent space or any 'bricking up' at the bottom of the fireplace opening.

(c) There must be a minimum clearance of 165mm (6½in) between the back of the closure plate and the fireplace back brick

(d) The top of the spigot opening in the closure plate (See Fig. 4) must be at least 25mm (1 in) below the top edge of the fire place opening.

(e) Ensure that the base of the fireplace is level with or lower than the hearth.

2.3 PRE-CAST FLUE OF MINIMUM CROSS SECTION (Fig. 5)

198mm x 67mm (7¾in x 2⅝In).

This fire is suitable for installation into a properly constructed pre-cast flue conforming to BS 1289 :1975 and BS 1289: Part 1 :1986 and Part 2 : 1989 of at least 3m (10ft) effective height and having flueways of at least 198mm x 67mm (7¾ x 2⅝ in) or equivalent cross-sectional area with no dimension less than 63mm (2½in).

The fireplace opening width must be between a maximum of 457mm and a minimum of 305mm. The opening height must be between a maximum of 630mm and a minimum of 441 mm and a depth of at least 100mm.

Ensure that any mortar fangs between the blocks do not protrude into the flueways and, if raking blocks are used, they are fitted according to the manufacturers instructions and mortar is not allowed to drop down and accumulate in the raked positions.

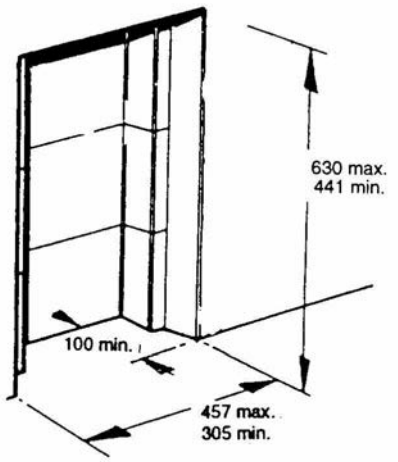

Fig. 5

2.4 TWIN-WALLED FLUES (Fig. 6)

This fire may be installed in a double walled or insulated metal box built to the requirements of BS 715 with a twin-walled or insulated flue at least 125mm (5in) in diameter and a minimum effective height of 3 metres (10ft). The depth of the opening must be at least 165mm.

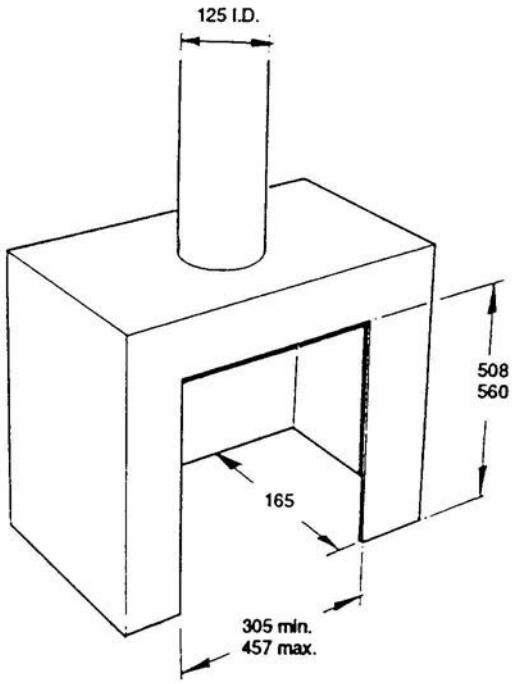

Fig. 6

3.0 Installation

3.1 UNPACK THE FIRE AND ACCESSORIES

1. Remove the top fitment.
2. Lift the carton clear of the fire pack.
3. Remove the front fitment which contains the following:-
   (i) Fender Assembly.
   (ii) Closure Plate.
   (iii) Cooler Plate.
   (iv) Spigot.
   (v) Spigot Restrictor.
   (vi) Artificial Log (De Luxe).
   (vii) Two Spinners (De Luxe).
   (viii) Control Knob Adaptor

Check these items and keep in a safe place.

3.2 FIT THE CLOSURE PLATE (Fig. 7)

IMPORTANT NOTES

(a) It is recommended that in the event of the proprietary closure plate not being available on site, one should be obtained from British Gas or your Local Supplier.

(b) The top of the closure plate may be trimmed to prevent sealing tape being seen above the fire. Ensure that there is at least 10mm overlap on fireplace opening. When wall mounting, it may be necessary to trim the bottom of the closure plate to prevent it showing below the fire.

After Trimming a new air relief opening 50mm wide x 38mm high must be cut in such a position that it is unobstructed by any brickwork.

(c) If a hole is cut in the closure place for access to gas supply pipe, seal the opening between the gas pipe and the closure plate.

A	660mm
B	460mm
C	415mm
D	40mm
E	240mm
F	50mm
G	38mm

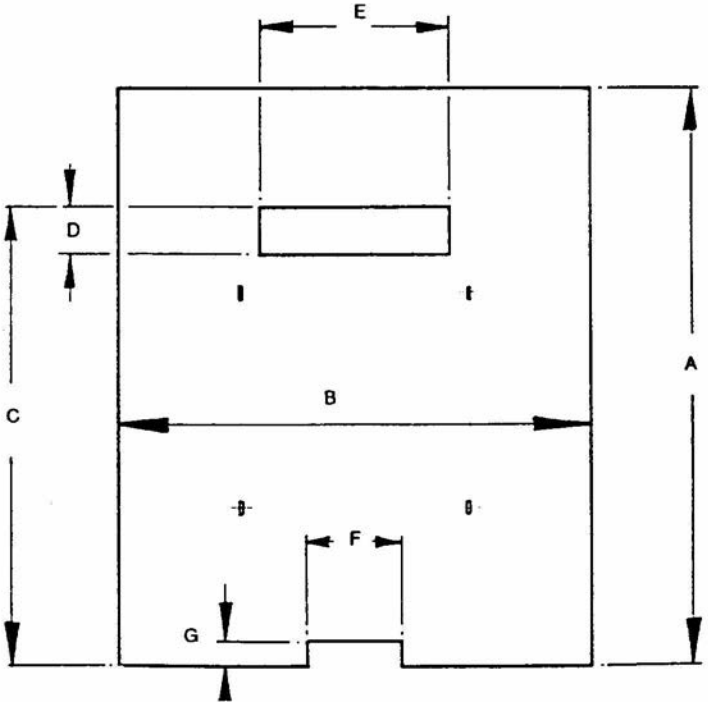

CLOSURE PLATE - TRIM OFF TOP AND BOTTOM AS NECESSARY WHILST ENSURING THAT THE FIREPLACE OPENING IS FULLY COVERED. A NEW AIR RELIEF OPENING MUST BE CUT IN THE CLOSURE PLATE TO THE REQUIRED SIZE.

Fig. 7

3.2.1. When Hearth Mounting.

Fit the closure plate centrally across the fireplace opening and seal all four edges.

3.2.2. When Wall Mounting

Ensure that the top of the spigot opening is at least 488mm above the finished floor level and at least 25mm below the top edge of the fireplace opening and that the air relief opening is unobstructed. Fit and seal the closure plate as described in Section 3.2.1.

3.2.3. Pre-Cast Flue Installations

Before fitting it will be necessary to fit the flue cooler plate supplied to the back of the closure plate. Bend the cooler plate along the two dotted lines to form a shape shown in Fig. 8. Push the tags through the slots in the closure plate. Bend the tags over to hold the closure plate firmly against the back of the closure plate. Fit and seal the closure plate as described in Section 3.2.1.

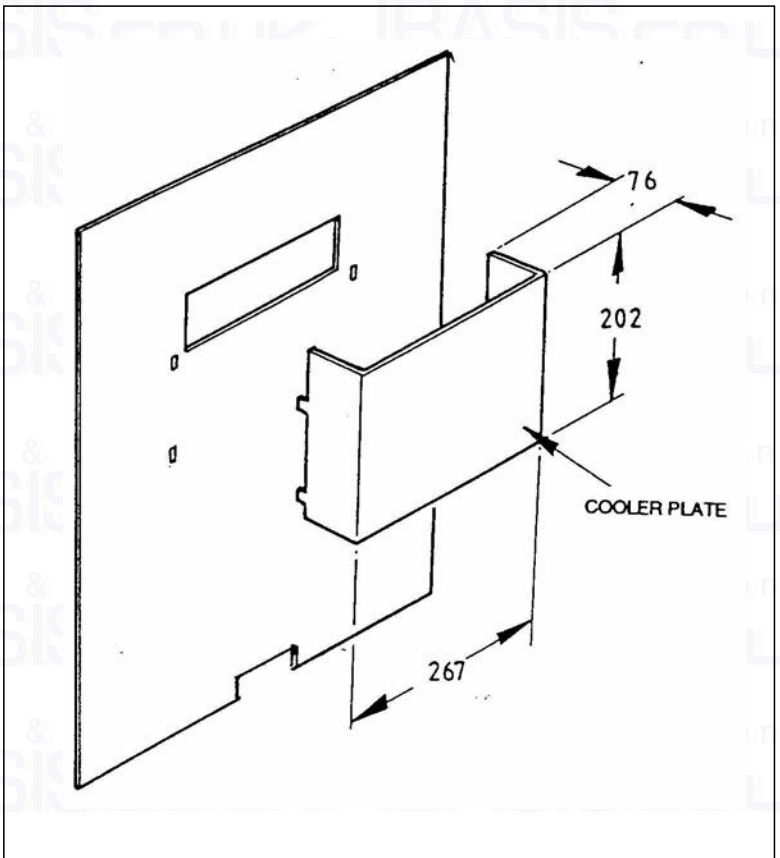

Fig. 8

3.3 CHECK THE FLUE PULL

Apply a lighted match, lighted paper or smoke match to the spigot opening in the closure plate. Observe if there is any up or down draught and if there is a definite flow into the spigot opening in the closure plate, proceed with fitting the fire. Any tendency to down draught must be corrected. If no flow is indicated, heat the chimney with, for example, a roll of burning paper or a blow lamp for two or three minutes. If there is still no definite flow into the spigot opening, the chimney may require attention;

DO NOT FIT THE FIRE - SEEK EXPERT ADVICE!

3.4 PREPARATION OF FIRE

3.4.1. Remove outer Case

Stand the fire upright. Pull off the control knob. Remove the Canopy, by removing two screws from each side and lifting to clear the knob spindle. Recover the spindle washer.
Place carefully aside.

The outer case is held to the backplate by four screws two on each side. Undo the four screws. Lift the outer case , ease it out and put in a safe place.

3.4.2 Remove Radiants and Transit Packing

Remove and discard the cardboard packing retaining the radiants. Remove the radiants by sliding upwards and outwards base first and place to one side in a safe place. Discard the paper packing in the radiant support plate.

3.4.3 Mains Lead Adaption (De Luxe)

Should the mains lead supplied be longer than is required, trim it to suit. Under no circumstances should excess cable be pushed up into the interior of the fire.

Should a longer mains cable be necessary proceed as follows: Undo the two screws one on each side securing the cover box to the log basket. Slacken the screw on the cable clamp securing the mains cable and the two screws underneath the cover box securing the electrical live and neutral wires to the terminal block. Undo the earth connection and pull out the mains cable. Insert the new mains cable and remake all connections.

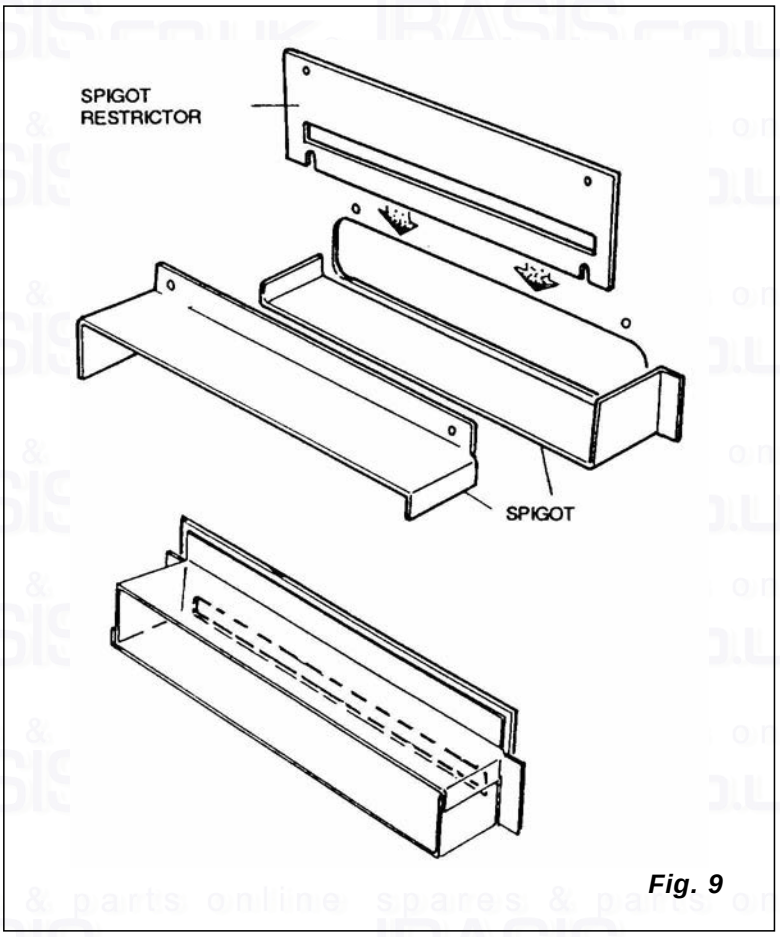

Fig. 9

3.5 FLUE SPIGOT RESTRICTOR (Fig. 9)

(a) Standard 228mm x 228mm (9in x 9in) Brick Chimney. The flue spigot restrictor must not be used if the chimney height is less than 4.3m (14ft) or if poor draught is suspected. If over 4.3m (14ft) in height with good draught, the flue spigot restrictor (Fig. 9) must be fitted.

(b) Pre-cast flues
The flue spigot restrictor must not be used.

(c) 175mm (7in) and 125mm (5in) diameter lined flues. The requirements in (a) apply.

3.6 FIT FLUE SPIGOT (Fig. 9)
(and Flue Spigot Restrictor if Required)

The flue spigot consists of two identical pieces and is held to the back of the fire by four screws. The four screws are already fitted around the flue outlet. Remove the top two screws but only loosen the bottom screws. If required engage the flue spigot restrictor on the bottom screws (with the words 'spigot restrictor' uppermost) so that the slots fit under the screwheads. Loosely secure the upper part of the flue spigot with the top two screws. Remove the bottom two screws and fix the other part of the flue spigot, sliding the side flange up the side of the upper part of the flue spigot. Tighten all four screws (trapping the top and bottom of the flue spigot restrictor if fitted).

If required a flue spigot extension is permissible up to a maximum projection of 150mm (6in) from the back of the fire.

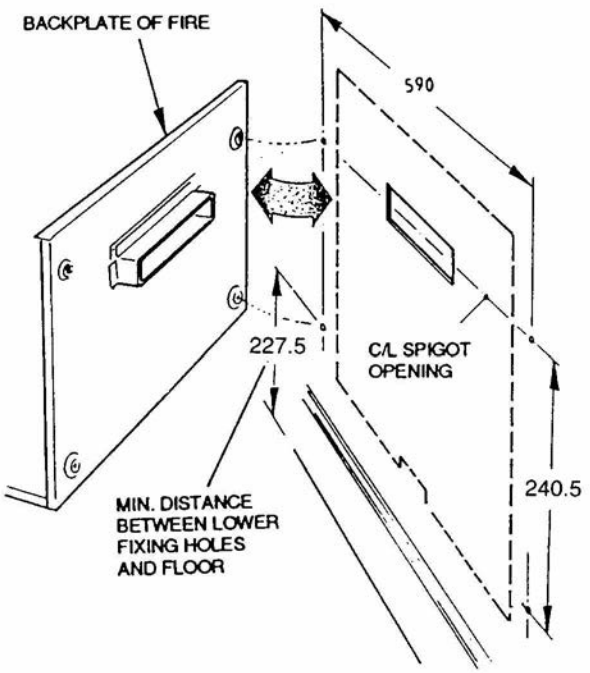

CLOSURE PLATE - TRIM OFF TOP AND BOTTOM AS NECESSARY WHILST ENSURING THAT THE FIREPLACE OPENING IS FULLY COVERED. A NEW AIR RELIEF OPENING MUST BE CUT IN THE CLOSURE PLATE TO THE REQUIRED SIZE.

Fig. 10

3.7 FIT GAS FIRE

3.7.1. Hearth Mounting

Place the fire in position against the wall. Levelling screws are fitted on the front legs and can be adjusted to take up any irregularities in the hearth. They should be locked after adjustment using the lock nuts provided. If the fire is fitted in a well-type hearth, ensure that any kerb on the hearth does not obstruct the air inlet to the appliance.

3.7.2 Wall Mounting

(to a non-combustible wall)

Undo the locknut on each of the levelling screws fitted to the legs and adjust the screws upwards as far as possible. It is essential that the minimum clearance from the floor level as indicated in fig. 10 is observed. Keyhole slots and securing holes are provided in the backplate of the fire. These holes are suitable for size 10 rawlplug fixing, using 50mm (2in) No. 10 round-head screws (not supplied). Drill and plug the wall at the four fixing point positions (Fig. 10). Partially insert the top two screws and mount the fire to the wall via the keyhole slots. Secure the fire by fitting the lower two screws and fully tightening the four screws.

4.0 Connect to Gas Supply

NOTE: (1) The appliance must be connected to gas with rigid or semi rigid tubing.
(2) Ensure that a service cock is provided for isolation of the fire for servicing.

4.1 MAKE GAS CONNECTION

The gas inlet is suitable for right hand, left hand or concealed connection. Connect the fire to the gas supply via the union elbow provided. This union elbow should be fitted to the end of the supply pipe then held in position under the flare nut whilst this is engaged. Reach beneath the burner to perform this operation. Tighten the flare nut with a spanner. The union elbow has a Rp ¼ (¼in B.S.P. internal) thread for the supply pipe.

4.2 TEST FOR GAS SOUNDNESS
(Refer to BS 6891)

The gas installation, including the meter, should be inspected and tested for soundness and purged.

4.3 TEST FOR CORRECT SETTING PRESSURE AND FSD OPERATION

Temporarily fit the control knob.
Remove the pressure test point sealing screw, located in the control tap and attach a pressure gauge to the test point. Light the fire and leave on at full rate (Refer to Users Instructions). Check that the burner pressure is 17mbar (6.8in w.g.) ± 1.0mbar (0.4in w.g.). If it is not, take the pressure at the meter to determine if there is a restriction in the installation pipework, or whether other appliances served by the same meter are starving the gas fire. Check that the flames are uniform and undistorted. Leave the fire running for 5 minutes then turn off the gas at the service cock. Wait 3 minutes then turn on the service cock again and check that the pressure gauge reads zero which indicates that the FSD is functioning. Turn off the fire gas tap, disconnect the pressure gauge and re-fit the test point sealing screw. Test for gas soundness around the sealing screw.

4.4 CHECK IGNITION

Check that the spark ignition functions reliably.
N.B. The spark electrode should be positioned as shown in Fig. 11.

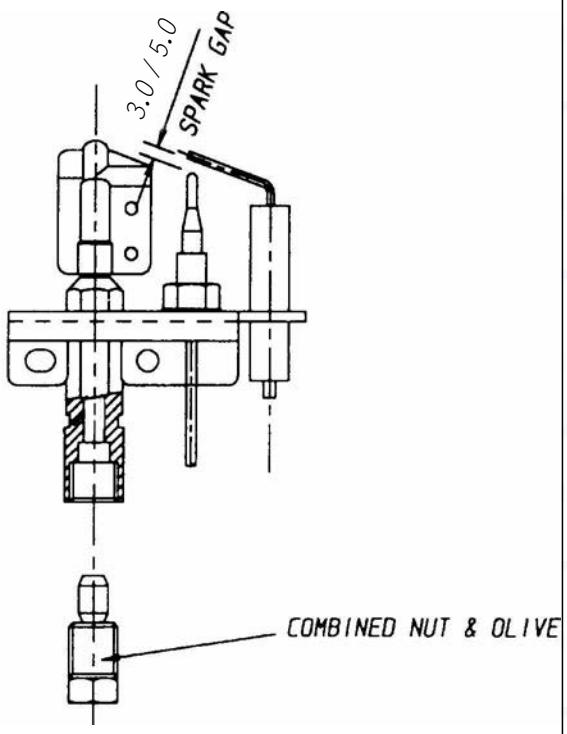

Fig. 11

5.0 Connect to Electricity Supply (D/L)

5.1 MAKE ELECTRICAL CONNECTION

1. THIS APPLIANCE MUST BE EARTHED

2. ALL EXTERNAL WIRING BETWEEN THE APPLIANCE AND THE ELECTRICAL SUPPLY SHALL COMPLY WITH CURRENT IEE WIRING REGULATIONS.

The mains lead has the following specification:

24/0.2mm 0.75mm circular 3 core flex cord to B.S. 6500 1975 Table 16. (suitable for 3 amps).

IMPORTANT
The wires in the mains lead are coloured in accordance with the following code:

GREEN AND YELLOW = EARTH
BLUE = NEUTRAL
BROWN = LIVE

As the colours of the wires in the mains lead of the appliance may not correspond with the coloured markings identifying the temninals in the plug, proceed as follows:

The wire which is coloured green and yellow must be connected to the terminal in the plug which is marked with the letter E or by the earth symbol or coloured green or green and yellow.

The wire which is coloured blue must be connected to the temninal which is marked with the letter N or coloured black.

The wire which is coloured brown must be connected to the terminal which is marked with the letter L or coloured red.

If the terminals of the plug are unmarked, consult a qualified electrician. Two-pin plugs must not be used.

For fused plugs, use a 3 amp fuse otherwise a 5 amp fuse must be fitted in the electrical supply.

In the event of electrical fault occurring after installation of the appliance, preliminary electrical system checks should be carried out using a suitable meter as follows:

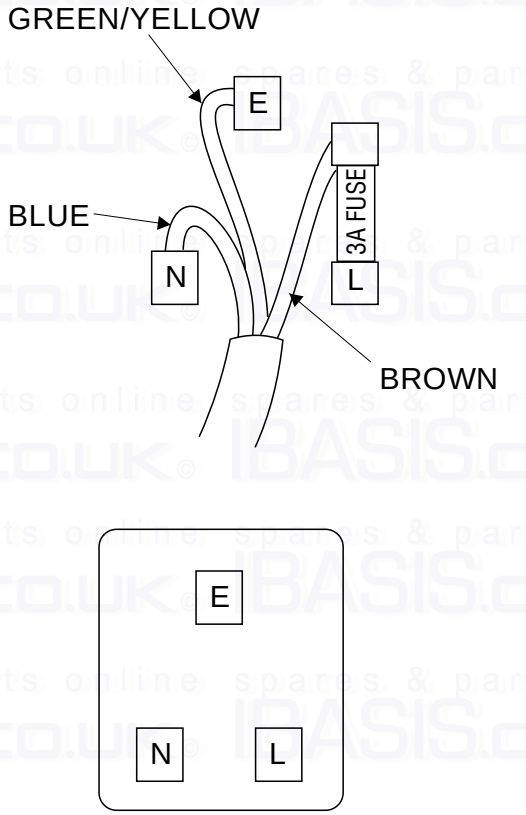

Fig. 12A

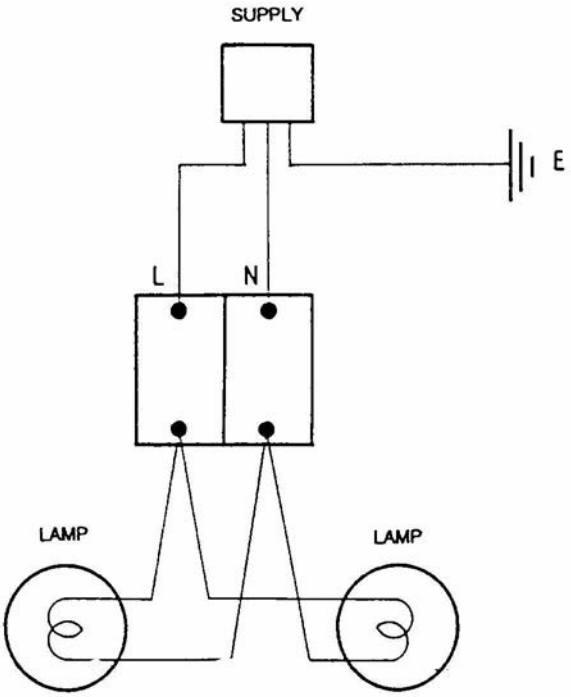

Fig. 12B

5.2 PRELIMINARY ELECTRICAL SYSTEM CHECKS

(See Figs. 12A, 12B and 12C)

A. Earth Continuity Check - appliance must be electrically disconnected, meter set on Ω (ohms) x 1 scale and adjust zero if. necessary.

(a) Test leads from appliance earth point to earth pin on plug - resistance should be less than 1Ω (ohm).

If resistance is greater than 1Ω (ohm) check all earth wires for continuity and ensure that all contacts are clean and tight.

If the resistance of earth is still greater than 1Ω (ohm) then this should be reported to your supervisor.

B. Short Circuit Check - appliance electrically disconnected

(a) Meter set on (ohms) x 1 scale. Test leads from L to N in appliance terminal trip/block - if meter reads zero then there in a short circuit.

(b) Meter set on ohms x 100 scale. Repeat test with leads from L to E. If meter reads less than ∞ (infinity) there is a fault.

NOTE:

Should it be found that the fuse has failed but no fault is indicated - a detailed continuity check (i.e. by disconnecting and checking each component) is required to trace the faulty component. It is possible that a fault could occur as a result of local burning/arcing but no fault could be found under test. However, a detailed visual inspection should reveal evidence of burning around the fault.

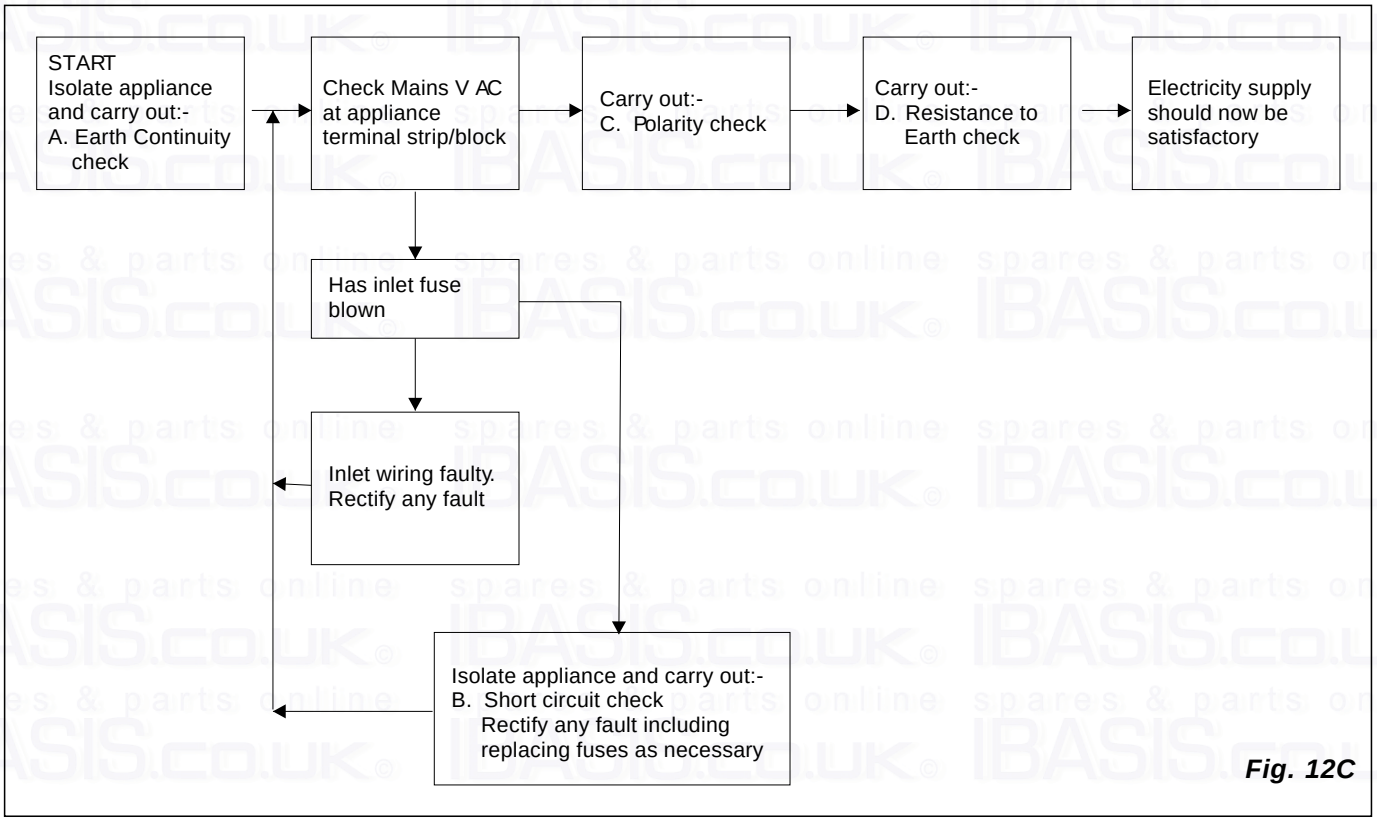

Fig. 12C

C. Polarity Check Remove the two screws securing the electrical cover box to the log basket. Slacken the screw on the cable clamp securing the mains lead. The electrical cover can now be lifted clear. This permits access to the terminal block and earthpost.

Appliance connected to the mains supply and meter set on 300VAC scale. Test at appliance strip:

(a) Test leads from L to N - meter reads approximately 240 Vac

(b) Test leads from L to E - meter reads approximately 240 Vac

(c) Test leads from N to E - meter reads from 0-15 Vac*

Thus the terminal marked L is the live terminal. If the low *Vac reading is given on terminals other than N to E, there is an electrical fault.

Repeat the test at the appliance plug/inlet spur to check the wiring system up to the appliance and rectify any fault. If necessary, repeat the test at the supply system socket/spur- if the fault also occurs at this stage then there is a house system fault which requires attention by the Electrical Authority. The customer should be warned not to use the appliance until this examination has been carried out.

D. Resistance to Earth Check
Appliance must be disconnected from mains supply and meter set on (ohms) x 100 scale. Test leads from L to E - if meter reads other than infinity there is a fault which should be isolated. A detailed continuity check is required to trace the faulty component.

IMPORTANT:
This series of checks are the first electrical checks to be carried out during a fault finding procedure. On completion of the service/fault finding task which has required the breaking and remaking of electrical connections then the checks A Earth Continuity: C Polarity and D Resistance to Earth - must be repeated.

6.0 Assembly of Fire

6.1 REMOVE CONTROL KNOB

Pull out the knob and keep in a safe place

6.2 REPLACE RADIANTS

Replace the radiants by inserting them top first beneath the firebox canopy then locate the bottom edge behind the front lip of the radiant support plate.

6.3 REFIT OUTER CASE AND CANOPY

Offer the outer case to the fire. Fit the top two screws and tighten. Also fit and tighten the two lower screws.

Raise the canopy over the fire and lower it gently to locate the knob spindle ensuring that the back of the canopy locates behind the backplate of the fire and that the screw holes line up. Fit and secure the four screws. Refit (drop) the spindle washer over top of spindle.

Refit the control knob (and adaptor if required, see Fig. 13).

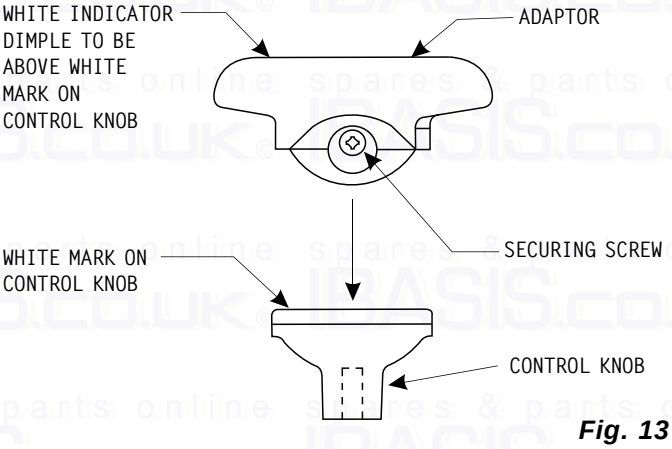

Fig. 13

6.4 CHECK FUNCTION OF LAMPS AND SPINNERS (De Luxe) Fig. 14A

Remove and discard the plastic sleeves from the pivot pins located above the lamps. The spinner with the red centre fits on the right hand pin, the other spinner with the white centre fits on the left hand pin. Connect to the electricity supply and switch on. Check that the larnps light and that after they have been alight for a few minutes the spinners turn. If the spinners do not rotate:

(a) Ensure that they are free to revolve and that the blades are not distorted. Re-set any distorted blades to the same angle as the remainder.

(b) Check that the pivot pins are clean, sharp and vertical.

(c) If necessary lubricate the spinner pivot bearing by lightly rotating a sharpened soft lead pencil in the bearing in the underside of the plastic centre of the spinner.

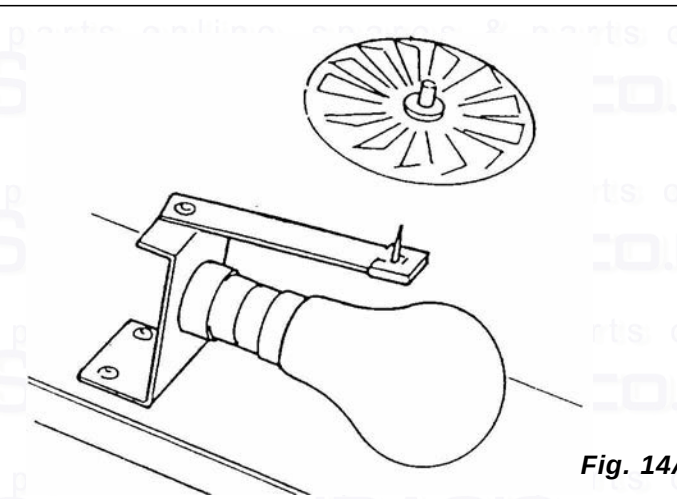

Fig. 14A

6.5 FIT ARTIFICIAL LOG (DeLuxe) Fig. 14B

Place the artificial log effect in the log basket taking care not to disturb the spinners.

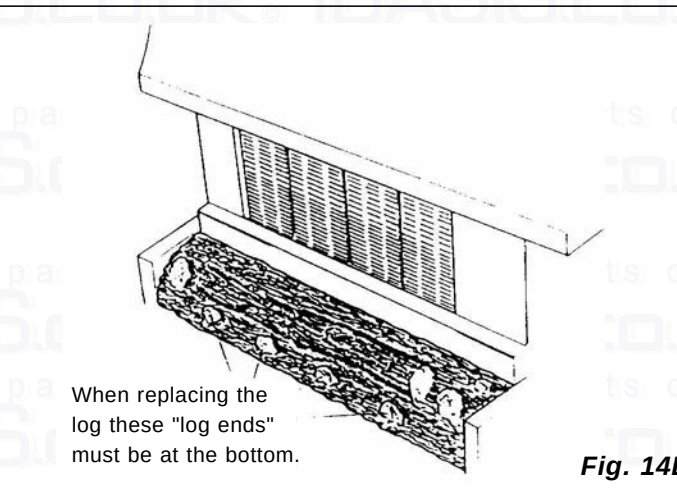

Fig. 14B

6.6 FIT FENDER

If the fire is wall mounted, first remove the foot assembly by undoing the foot guide at each end of the fender. Engage the retaining screw heads of the fender in the keyhole slots of the outer case and let the fender slide down to locate and secure itself.

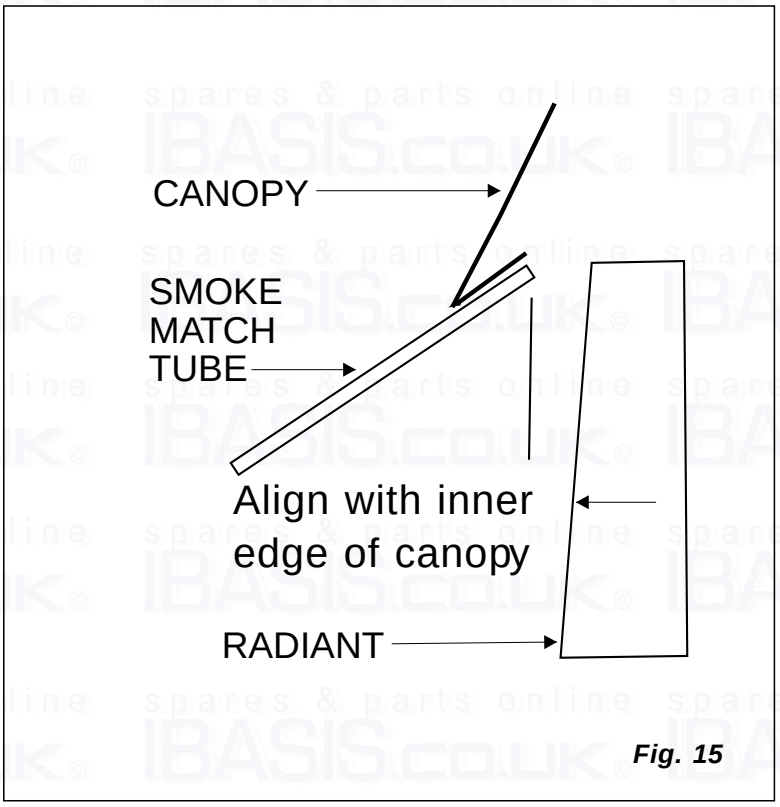

Fig. 15

7.0 Test for Spillage

A spillage test must be made before the installed fire is left with the user. This carried out in the following manner: Light the fire and leave on at full rate. Close all doors and windows in the room and after the fire has been alight for five minutes, insert a lighted smoke match under the canopy above the centre radiants 25mm (1 in) inside (See Fig 15). If the smoke is drawn into the fire the installation is satisfactory. If the smoke is not drawn into the fire leave for another ten minutes and repeat the test, if the smoke is still not drawn into the fire remove the fire and check the sealing of the closure plate. If this is satisfactory remove the spigot restrictor, if fitted, re-fit the fire then check for spillage. If the spillage still persists

DO NOT LEAVE THE FIRE CONNECTED TO THE GAS - SEEK EXPERT ADVICE

If there is a fan or fan operated appliance in a nearby room, then the spillage test must be repeated with the fan running and all inter-connecting doors between the fan and the fire left open. If the fan and the fire are in the same room, close all windows and doors connected to the room, switch on the fan and repeat the spillage test.

8.0 Make sure that the user knows that:

1

The control knob must be pressed in before turning and always set to one of the stated positions.

2

The fire can be lit with a match if necessary as detailed in the Users Instructions.

3

The fire should be disconnected from the electrical supply before changing the lamps (D/L)

4

The fire should be serviced annually by a competent person for continuing efficient and safe operation.

5

When the new fire is first lit, a slight smell might be noticed. This should soon pass away after a few hours of use.

6

Explain to the user the functioning of the combined flame supervision and atmosphere monitoring device as detailed in Section 9.6. Stress that if the device repeatedly shuts off the fire, the fault must be rectified immediately by a competent person.

9.0 Important Notes

WITHDRAW THE PLUG FROM THE ELECTRICITY SUPPLY BEFORE BEGINNING AND SERVICING (De Luxe). TURN OFF
MAIN GAS SUPPLY TO THE FIRE. ALWAYS TEST FOR GAS SOUNDNESS AFTER SERVICING OR EXCHANGING ANY COMPONENT.

N.B. To avoid damage to the radiants during servicing, it is recommended that these are removed and put to one side, in a safe place. It is also recommended that other items like log spinners and bulbs be put in a safe place (if applicable).

9.1 REMOVAL OF THE OUTER COMPONENTS.

Remove the fender assembly by first lifting it upwards and pulling it away from the fire. Remove the log and spinners (De Luxe). Pull off the gas tap knob. Undo the four screws securing outer case, two on each side of the fire. Lift and ease out the outer case and canopy.

9.2 GAS TAP/FSD ASSEMBLY

Remove outer components (9.1 above).

(a) Removal: Withdraw the lower spring clip securing the spindle extension to the gas tap spindle and remove. Disconnect the spark lead at the piezo igniter. Undo the union nut on the inlet to the gas tap. Disconnect the union nut connecting the pilot feed to the gas tap. Disconnect the thermocouple at the gas tap end. Remove the large nut securing the gas tap to the burner at the lower injector. Ease off the gas tap.

(b) Replacement: Ensure that the tap is in the off position. Transfer the two injectors from the old tap to the new one. Refit the gas tap to the burner. Re-assemble in the reverse manner to removal ensuring that the flat of the extension spindle is facing to the right.

9.3 INJECTORS

Remove outer components (9.1 above). Remove gas tap/fsd assembly (9.2 (a) above). Unscrew injectors from the tap and replace with new ones. Re-assemble in the reverse manner.

9.4 BURNER ASSEMBLY

Remove other components (9.1 above). Withdraw the lower spring clip securing the spindle extension and remove extension. Disconnect the union nut at the inlet of the gas tap. Remove the three brass nuts, two on the left side of the firebox which hold the burner in position. Take care not to lose the spacer from the right hand burner stud which is loose. Remove the burner, gas tap, and pilot as a complete assembly then detach the gas tap and pilot as a unit from the old burner. Transfer these to the new burner and re-assemble in the reverse manner.

9.5 PILOT FILTER

Remove the pipe connecting the pilot to the gas tap (2 nuts). The pilot filter is located in the outlet from the tap, prise it out with a pin. Insert new pilot filter (it may be convenient to balance the new filter on the outlet and push home using a matchstick). Re-fit the pipe, tighten the nuts and check operation.

9.6 PILOT ASSEMBLY

The pilot is an atmosphere sensing device and must be replace as a complete unit. Repair must not be undertaken.

NOTE: If the fire keeps going out or exhibits signs of nuisance shut off, check the operation of the pilot as follows:-

(a) Inspect the pilot flame, if suspect check gas supply. Clear blockage if necessary, if flame is still suspect replace pilot assembly.

(b) Check the thermocouple. If faulty replace the pilot assembly.

(c) Check the magnet unit in the gas tap. If faulty replace the tap.

(d) Check the ventilation in the room. Vitiation may be due to lack of sufficient air supply.

(e) Check for satisfactory clearance of combustion products. Vitiation may be due to spillage of combustion products into the room.

Disconnect the pilot feed pipe at the gas tap and the pilot body at the main burner. Pull off the spark lead at the electrode and disconnect the thermocouple nut at the gas tap. Withdraw the pilot complete with pipe. Swap the pipe onto the new pilot. Re-assemble in the fire and make all the connections. Check the operation of the fire.

9.7 PIEZO IGNITER

The ingniter is not renewable as a separate item. If the igniter is faulty, the gas tap/fsd assembly must be replaced.

A lint filter has been fitted to the pilot of this appliance to filter out any dust or lint which may present in normal household room air.

9.8 PILOT LINT FILTER

If you notice that the appliance has a floppy yellow pilot flame and/or there is difficulty in lighting the appliance then the lint filter may need cleaning. Cleaning should be carried out by vacuuming the dust and lint from the filter. If vacuuming alone is not successful in curing the ignition problem then a CORGI registered service engineer must be called to investigate the problem.

To remove the lint filter for cleaning or to gain access to the aeration hole simply slide the lint filter downward. Refit by pushing up against the pilot bracket, ensure it is crimped to hold it in place.

When supplied as a spare part the lint trap must be fitted as shown and crimped to fix in place, ensuring it is 'butted up' to the pilot bracket.

ODS PILOT ASSEMBLY WITH LINT FILTER FITTED

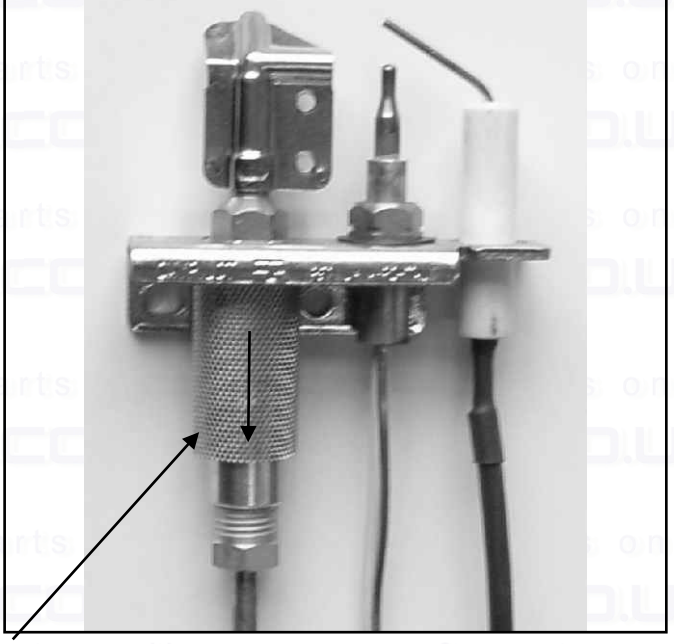

Lint Filter

To remove slide downward after disconnecting the pilot gas supply tube.

Shortlist of Parts

KEY No.	G.C. PART No.	RW PART No.	DESCRIPTION
1	154 371	995971	Radiant
2	378 946	822187	Gas Tap/FSD Assembly
3	398 319	822089	Injector
4	379 044	822131	Pilot Filter
5	159 421	993132	Spark Lead
6	159 584	992495	Pilot Assembly (with filter)
7	159 453	992851	Dressguard
8	138 913	820863	Knob
9	138 076	820134	Lamp
10	159 504	822160	R.H. Spinner (Red centre)
11	159 505	822161	L.H. Spinner (White centre)
12	159 581	992505	Control Knob Adaptor

(see page 16)

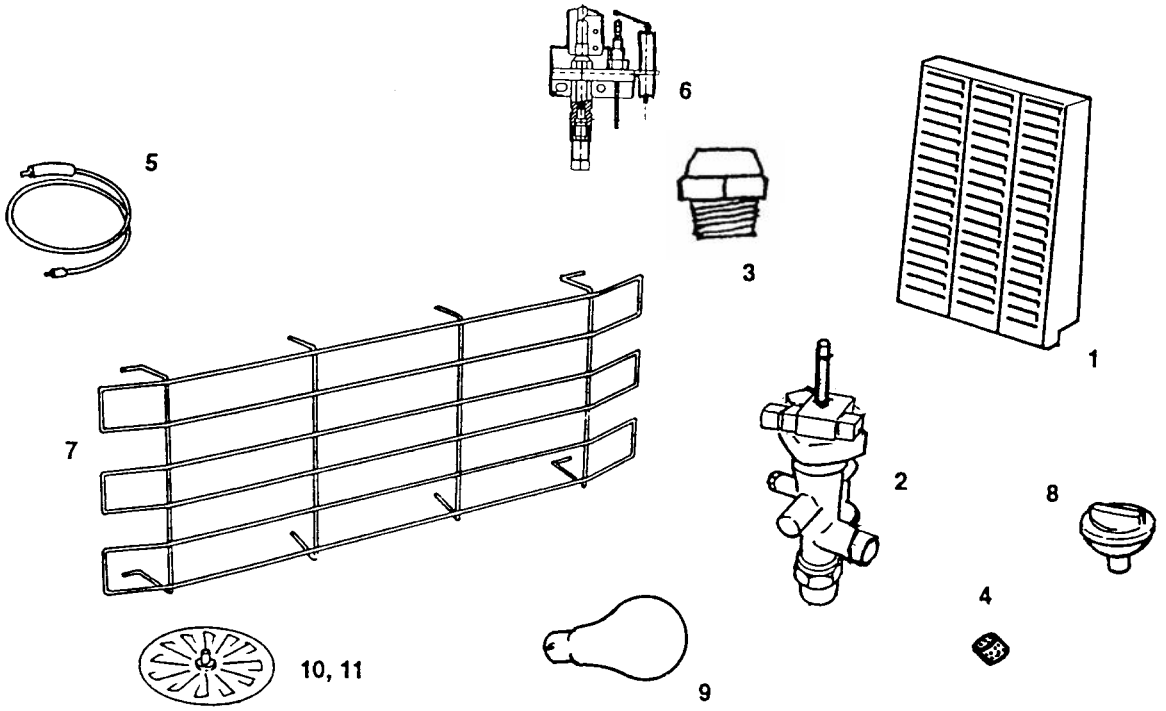

992491
Issue 5

ROBINSON WILLEY LIMITED
Mill Lane, Old Swan, Liverpool. L13 4AJ. England.
Telephone: 0151-228-9111 Fax: 0151-228-6661
Website: www.robinson-willey.com Email: info@robinson-willey.com

spares & parts online IBASIS.CO.UK